BENOPLAST®
www.benoplast.com

ECO-ALC46-300
400x600x300(h)mm

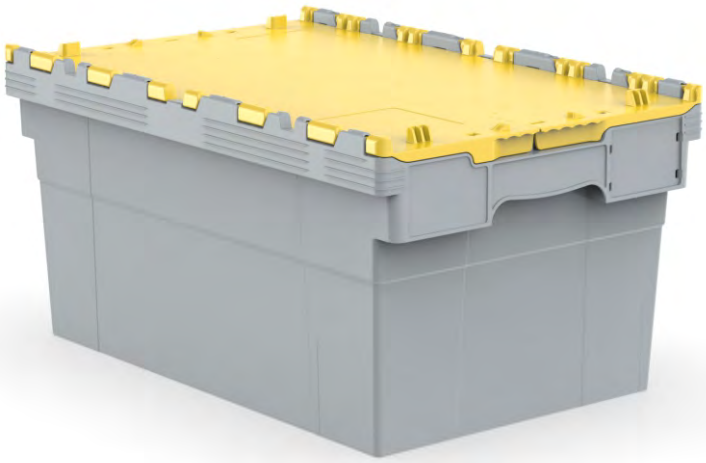

0 100
PPC

%100 Recyclable

Food Grade

Product Details

External Dimensions	Internal Dimensions	Weight	Unit Load	Overlap Height	Nested Height	Handle Options
400x600x300 (h)mm	365x550x283 (h)mm	2.900 gr PPC (±%3)	30 kg	586 mm	379 mm	Open: X Closed: ✓

Loading Informations

Loading Type	Package Details	Loading Quantities
40'HC	108 pcs / 100*120 pallet	108x22=2.376 pcs
Truck	120 pcs / 100*120 pallet	120x26=3.120 pcs

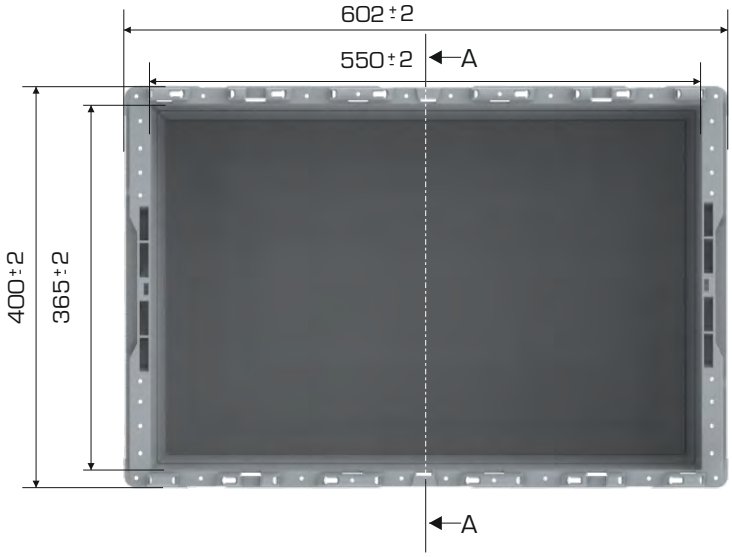

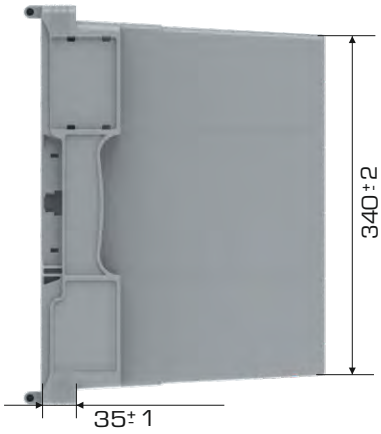

SELECT A-A

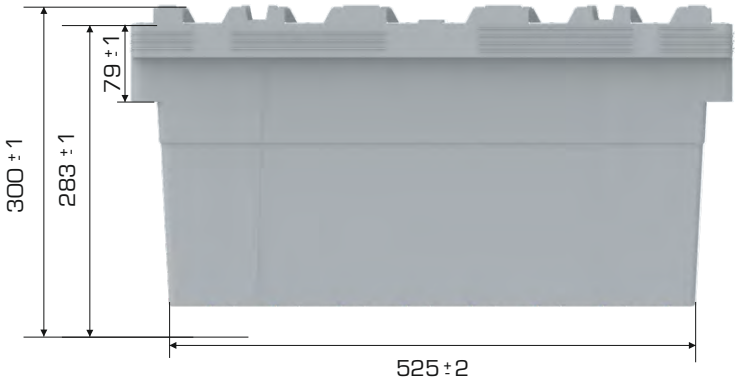

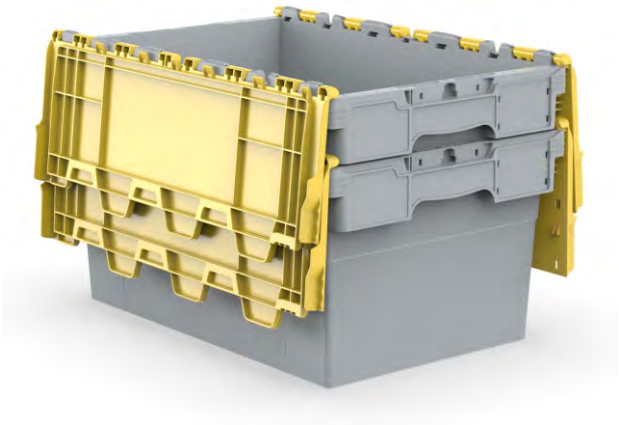

Branding Solutions

Digital Printing	Laser Printing	Screen Printing	Hot Stamping	Cliche	Labeling	Kanban Holder	RFID
✓	✓	✓	✓	✓	✓	✓	✓