BENOPLAST®
www.benoplast.com

ECO-ALC46-350

400x600x350(h)mm

0 100
PPC

%100 Recyclable

Food Grade

Product Details

External Dimensions	Internal Dimensions	Weight	Unit Load	Overlap Height	Nested Height	Handle Options
400x600x350 (h)mm	365x550x333 (h)mm	3.100 gr PPC (±%3)	35 kg	686 mm	429 mm	Open: X Closed: ✓

Loading Informations

Loading Type	Package Details	Loading Quantities
40'HC	108 pcs / 100*120 pallet	108x22=2.376 pcs
Truck	116 pcs / 100*120 pallet	116x26=3.016 pcs

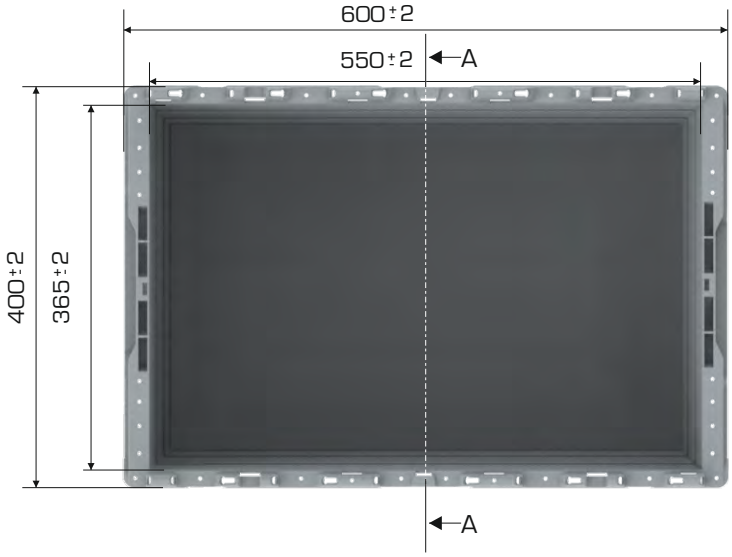

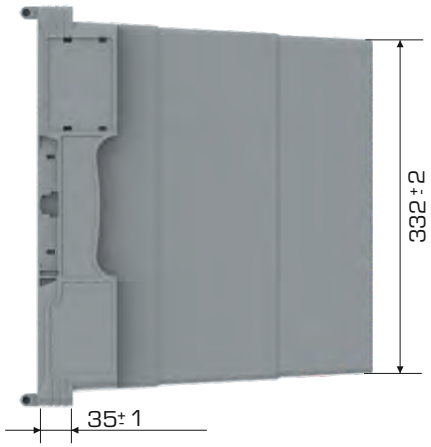

SELECT A-A

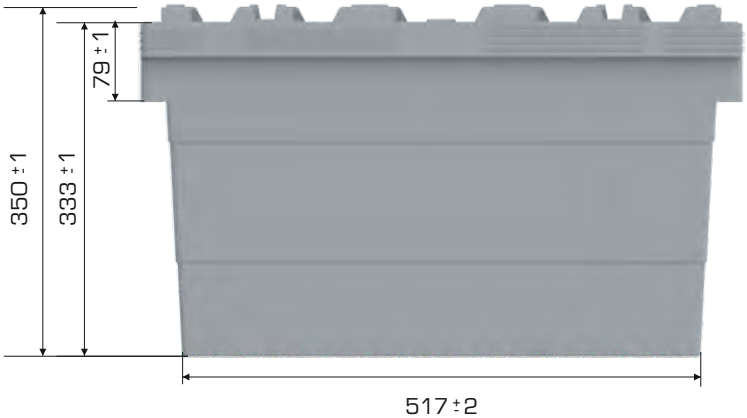

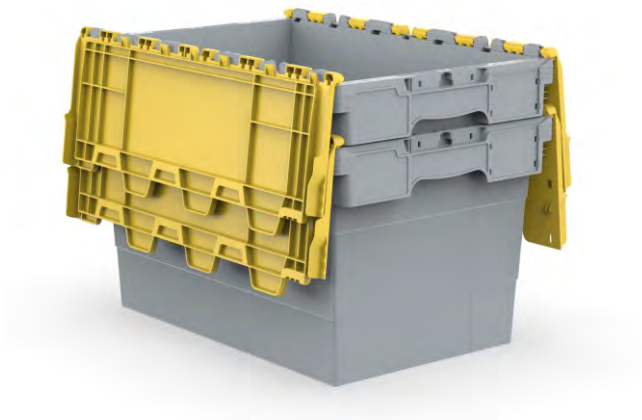

Branding Solutions

Digital Printing	Laser Printing	Screen Printing	Hot Stamping	Cliche	Labeling	Kanban Holder	RFID
✓	✓	✓	✓	✓	✓	✓	✓