BENOPLAST®
www.benoplast.com

B-3217
200x300x170 (h)mm

0 100
PPC

%100 Recyclable

Food Grade

Product Details

External Dimensions	Internal Dimensions	Weight	Unit Load	2nd Height	Handle Options
200x300x170 (h)mm	180x262x150 (h)mm	417gr PPC (±3%)	3 kg	+154 mm	Open: X Closed: ✓

Loading Informations

Loading Type	Package Details	Loading Quantities
40'HC	500 pcs / 80*120 pallet	500x25=12.500 pcs
Truck	500 pcs / 80*120 pallet	500x33=16.500 pcs

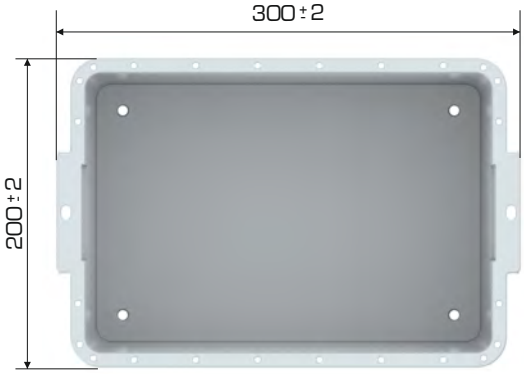

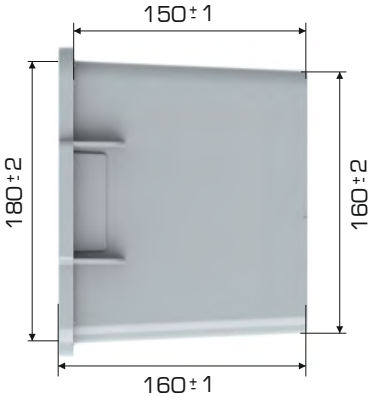

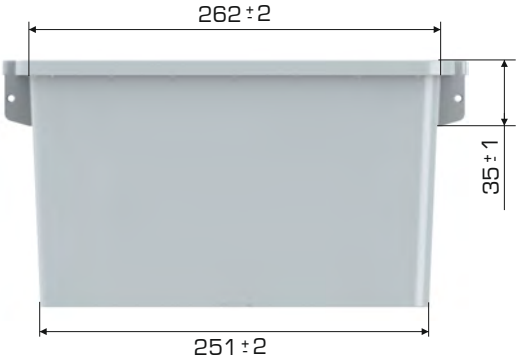

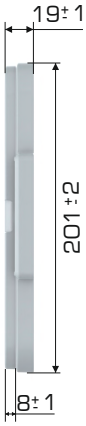

Branding Solutions

Digital Printing	Laser Printing	Screen Printing	Hot Stamping	Cliche	Labeling	Kanban Holder	RFID
✓	✓	✓	✓	✓	✓	✓	✓