BENOPLAST®
www.benoplast.com

B-180
310x600x190 (h)mm

0 100
PPC

%100 Recyclable

Food Grade

Product Details

External Dimensions	Internal Dimensions	Weight	Unit Load	Overlap Height	Handle Options
309x600x189 (h)mm	279x542x186 (h)mm	1.400 gr PPC (±%3)	8 kg	383 mm	Open: X Closed: ✓

Loading Informations

Loading Type	Package Details	Loading Quantities
40'HC	138 pcs / 100*120 pallet	138x22=3.036 pcs
Truck	150 pcs / 100*120 pallet	150x26=3.900 pcs

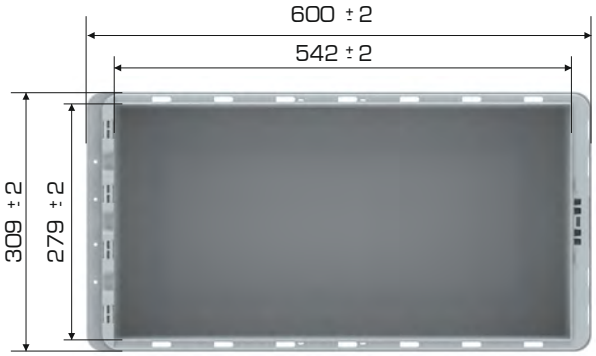

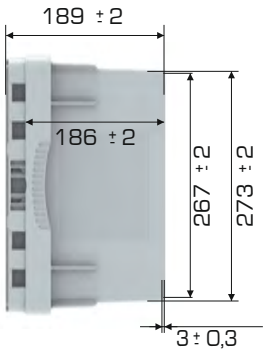

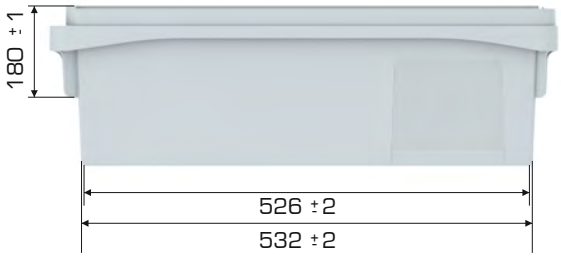

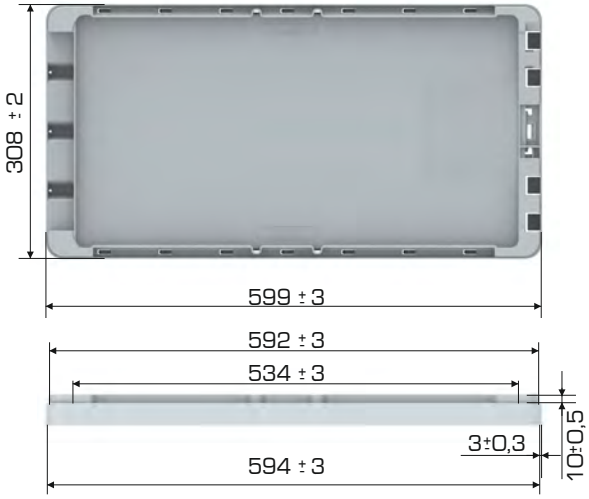

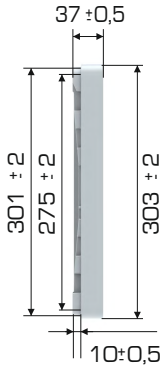

Branding Solutions

Digital Printing	Laser Printing	Screen Printing	Hot Stamping	Cliche	Labeling	Kanban Holder	RFID
✓	✓	✓	✓	✓	✓	✓	✓