BENOPLAST®
www.benoplast.com

B-3211
200x300x120 (h)mm

0 100
PPC

%100 Recyclable

Food Grade

Product Details

External Dimensions	Internal Dimensions	Weight	Unit Load	2nd Height	Handle Options
198x298x118 (h)mm	164x264x116 (h)mm	410gr PPC (±3%)	5 kg	+110 mm	Open: X Closed: ✓

Loading Informations

Loading Type	Package Details	Loading Quantities
40'HC	440 pcs / 100*120 pallet	440x22=9.680 pcs
Truck	368 pcs / 80*120 pallet	368x33=12.144 pcs

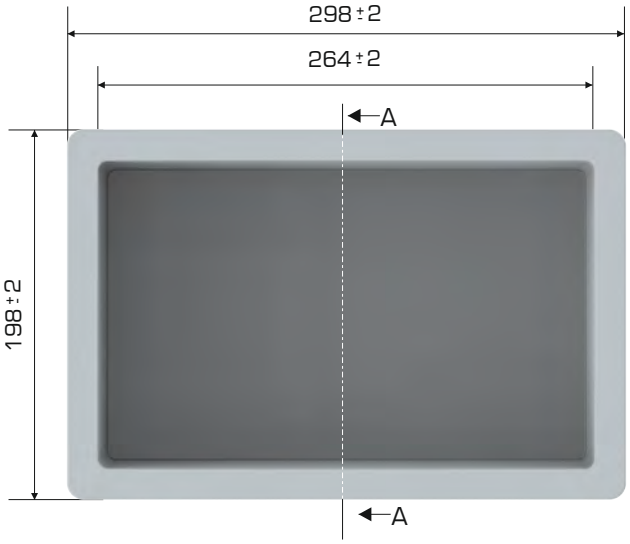

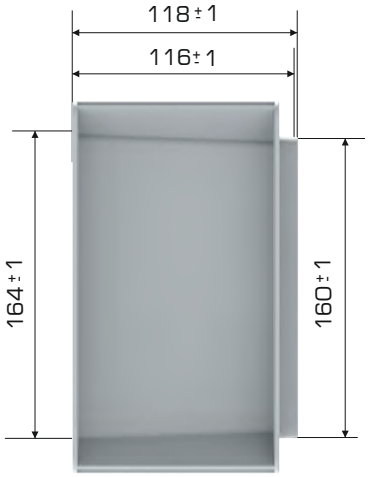

SECTION A-A

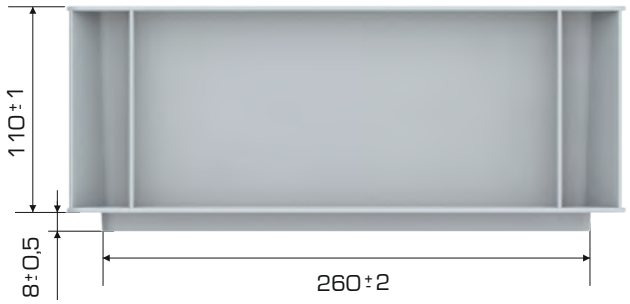

Branding Solutions

Digital Printing	Laser Printing	Screen Printing	Hot Stamping	Cliche	Labeling	Kanban Holder	RFID
✓	✓	✓	✓	✓	✓	✓	✓