BENOPLAST®
www.benoplast.com

C-KLT 4328
300x400x280 (h)mm

0 100
PPC

%100 Recyclable

Food Grade

Product Details

External Dimensions	Internal Dimensions	Weight	Unit Load	2nd Height	Handle Options
297x396x280 (h)mm	247,5x334x236,5 (h)mm	2.600 gr PPC (±%3)	50 kg	+265 mm	Open: X Closed: ✓

Loading Informations

Loading Type	Package Details	Loading Quantities
40'HC	90 pcs / 100*120 pallet	90x22 = 1.980 pcs
Truck	72 pcs / 80*120 pallet	72x33 = 2.376 pcs

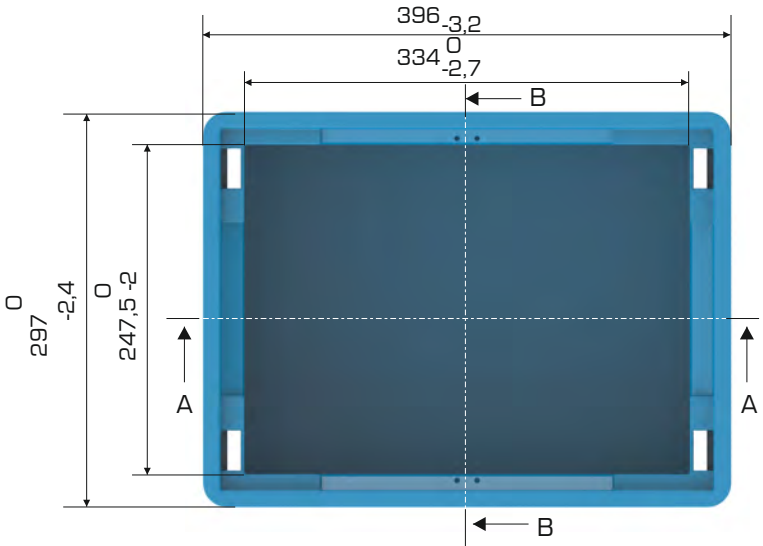

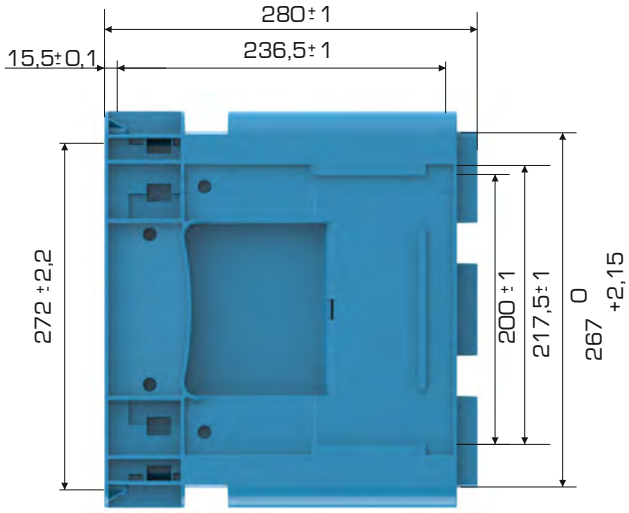

SECTION B-B

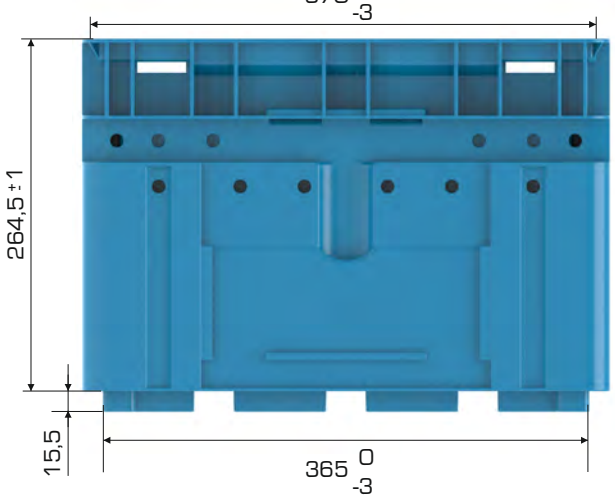

SECTION A-A

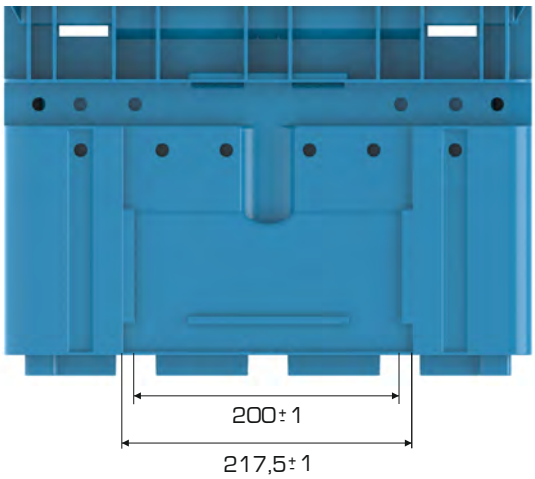

Branding Solutions

Digital Printing	Laser Printing	Screen Printing	Hot Stamping	Cliche	Labeling	Kanban Holder	RFID
✓	✓	✓	✓	✓	✓	✓	✓