BENOPLAST®
www.benoplast.com

R-KLT 3215
200x300x150 (h)mm

0 100
PPC

%100 Recyclable

Food Grade

Product Details

External Dimensions	Internal Dimensions	Weight	Unit Load	2nd Height	Handle Options
198x297x147,5 (h)mm	162x242,5x144,5 (h)mm	570 gr PPC (±3%)	20 kg	+133 mm	Open: X Closed: ✓

Loading Informations

Loading Type	Package Details	Loading Quantities
40'HC	360 pcs / 100*120 pallet	360x22 = 7.920 pcs
Truck	304 pcs / 80*120 pallet	304x33 = 10.032 pcs

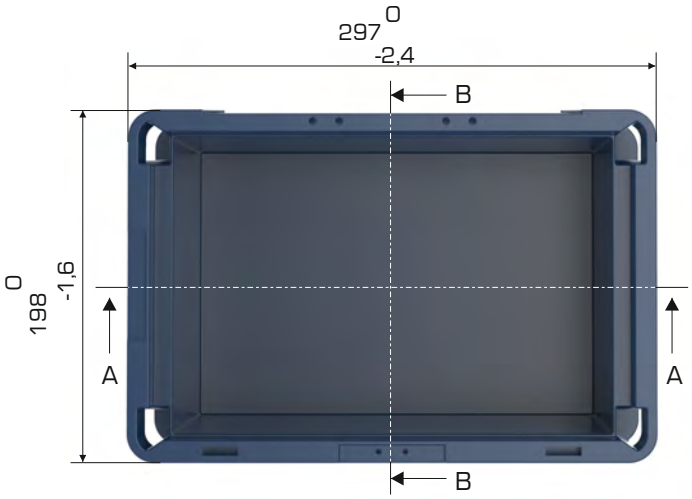

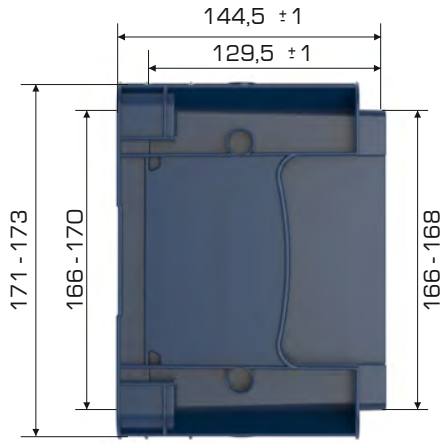

SECTION B-B

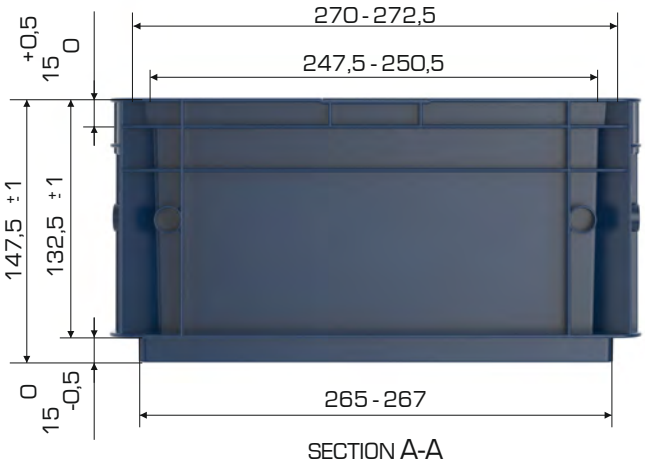

SECTION A-A

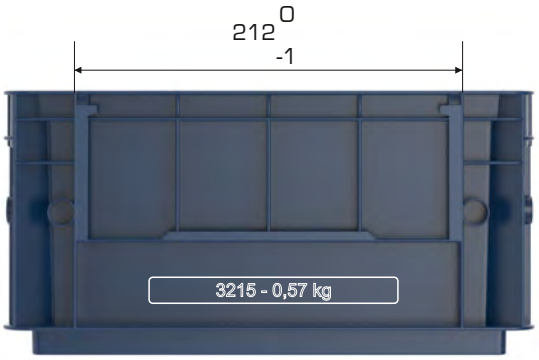

Branding Solutions

Digital Printing	Laser Printing	Screen Printing	Hot Stamping	Cliche	Labeling	Kanban Holder	RFID
✓	✓	✓	✓	✓	✓	✓	✓