BENOPLAST®
www.benoplast.com

R-KLT 4315
300x400x150 (h)mm

0 100
PPC

%100 Recyclable

Food Grade

Product Details

External Dimensions	Internal Dimensions	Weight	Unit Load	2nd Height	Handle Options
297x396x147,5 (h)mm	264x344x124,5 (h)mm	1.290 gr PPC (±%3)	20 kg	+133 mm	Open: X Closed: ✓

Loading Informations

Loading Type	Package Details	Loading Quantities
40'HC	180 pcs / 100*120 pallet	180x22 = 3.960 pcs
Truck	152 pcs / 80*120 pallet	152x33 = 5.016 pcs

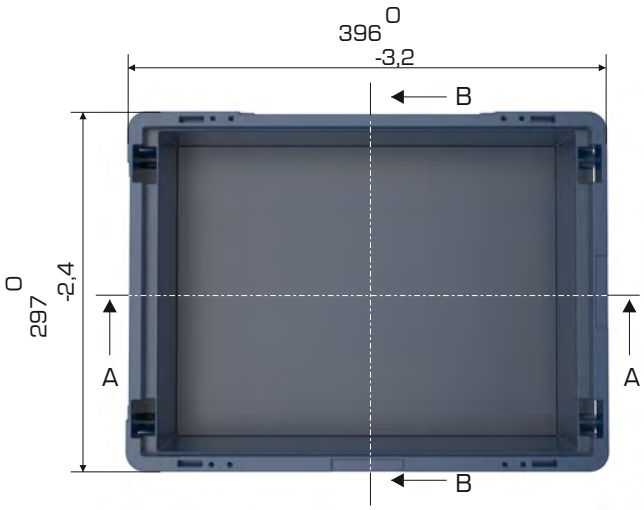

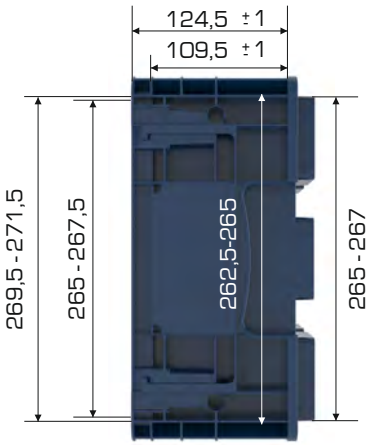

SECTION B-B

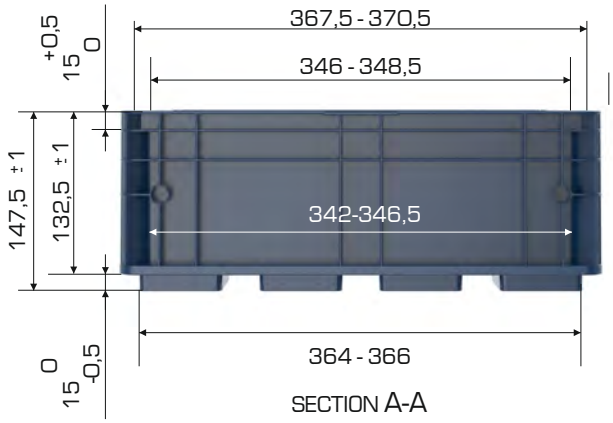

SECTION A-A

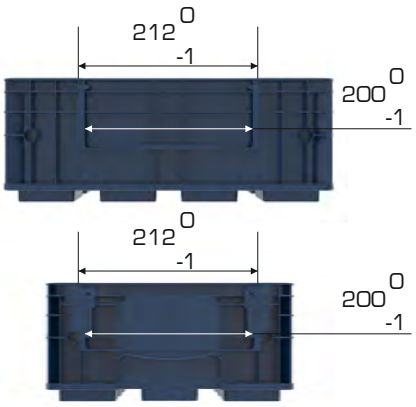

Branding Solutions

Digital Printing	Laser Printing	Screen Printing	Hot Stamping	Cliche	Labeling	Kanban Holder	RFID
✓	✓	✓	✓	✓	✓	✓	✓