BENOPLAST®
www.benoplast.com

RL-KLT 4213
300x400x210 (h)mm

0 100
PPC

%100 Recyclable

Food Grade

Product Details

External Dimensions	Internal Dimensions	Weight	Unit Load	2nd Height	Handle Options
297x396x213,7 (h)mm	261x344x210,7 (h)mm	1.420 gr PPC (±%3)	20 kg	+199 mm	Open: X Closed: ✓

Loading Informations

Loading Type	Package Details	Loading Quantities
40'HC	120 pcs / 100*120 pallet	120x22=2.640 pcs
Truck	96 pcs / 80*120 pallet	96x33=3.168 pcs

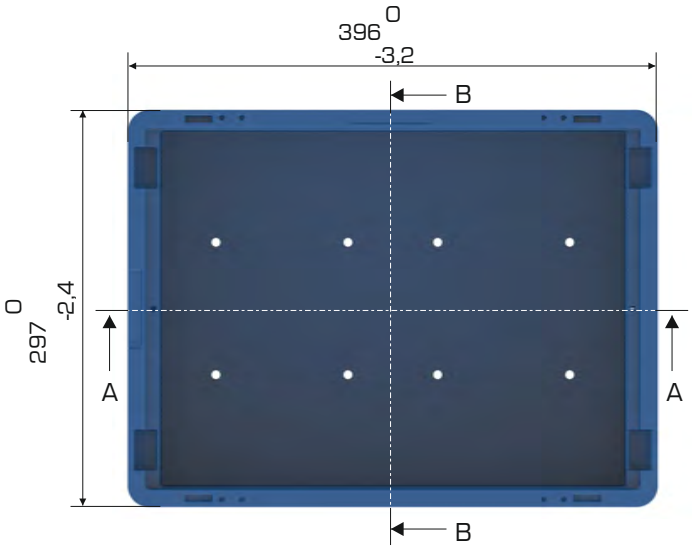

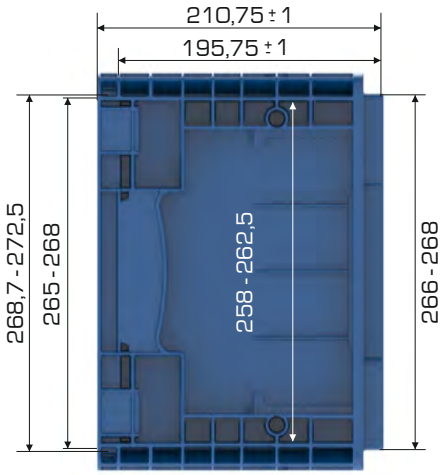

SECTION B-B

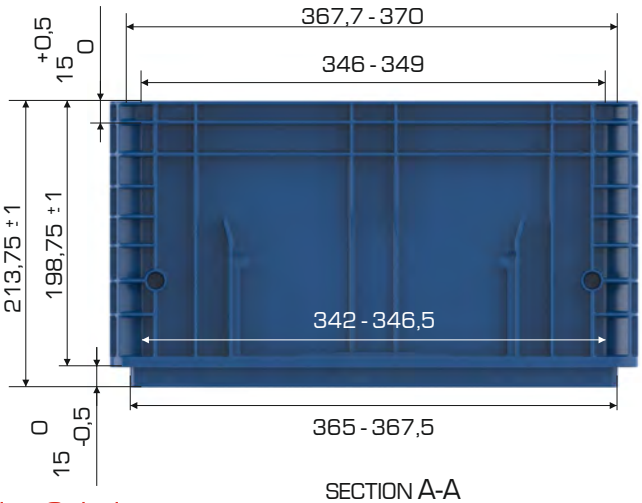

SECTION A-A

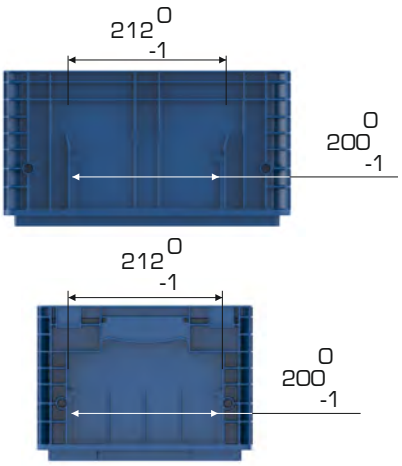

Branding Solutions

Digital Printing	Laser Printing	Screen Printing	Hot Stamping	Cliche	Labeling	Kanban Holder	RFID
✓	✓	✓	✓	✓	✓	✓	✓